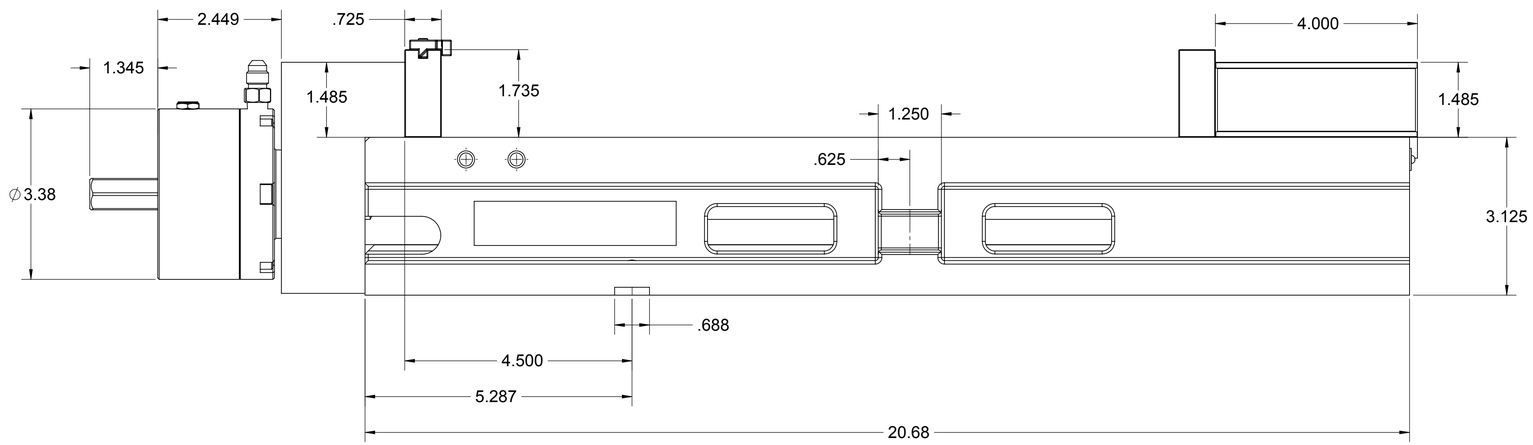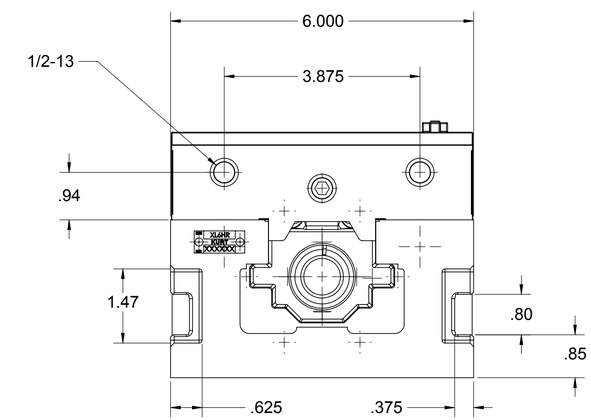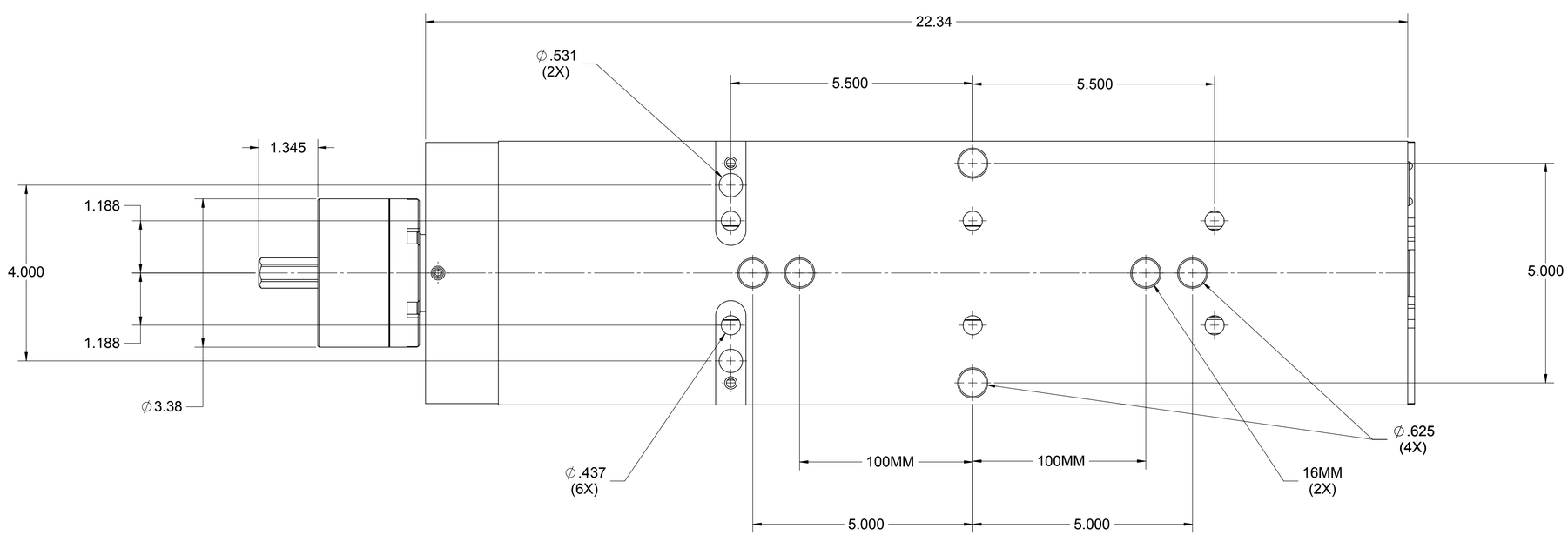XL6HR (2D VIEWS)